Cantilever

- 6' tall at the seat
- Permanent unit features a slim design that requires minimal deck space
- Seat swivels 360° for a full view of facility
- Extended observation platform features a non-slip, white, sanded tread
- Handrails and seat post are 304 stainless steel
- The support column is primed and ready for a high quality paint topcoat*

* We recommend a high-quality acrylic urethane enamel for a durable finish

Model No.	Description	Shipping (3 boxes) - Class 125			
		Weight	Length	Width	Height
CAT-LG-101	6' Cantilever	315 lbs 143kg	65"/165cm 25"/ 64cm 24"/61cm	21"/53cm 20"51cm 22"/56cm	25.5"/65cm 10"/ 25cm 21"/53cm

Note:
• Ships from both Tennessee and Oregon facilities

Tread Color

RADIANT WHITE

Custom colors available

Replacement Parts

- 13-101 Support Column
- 8-602 Footboard (30" x 42")
- 13-124 Seat Post + Umbrella Holder
- 13-119 Seat, includes Mounting Plate + Swivel, includes Hardware
- 6-621 Step Adhesive
- 8-610 Seat Only
- A40703-0 Swivel Only
- 13-104 Handrail + Hardware
- 13-103 Anchor + Mounting Hardware

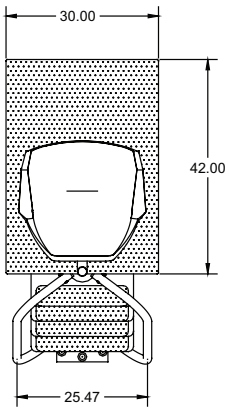

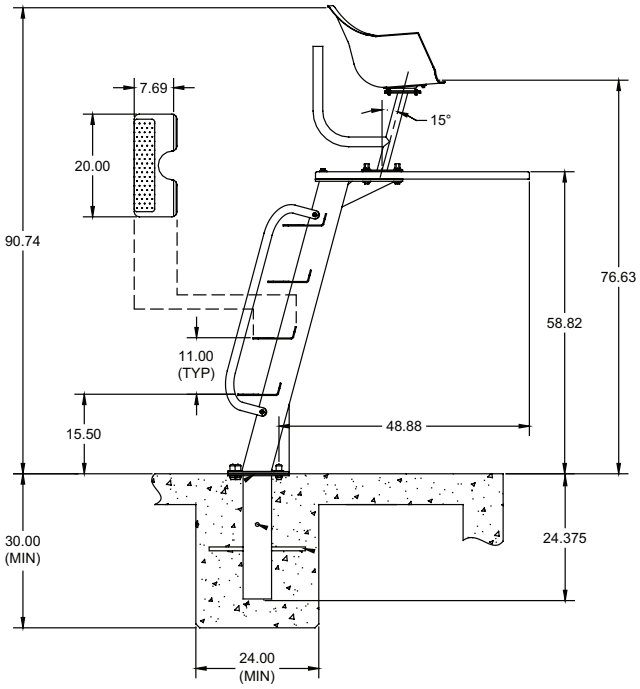

Copyright © 2016, S.R.Smith, LLC. All rights reserved.
For the latest version of this document, see srsmith.com